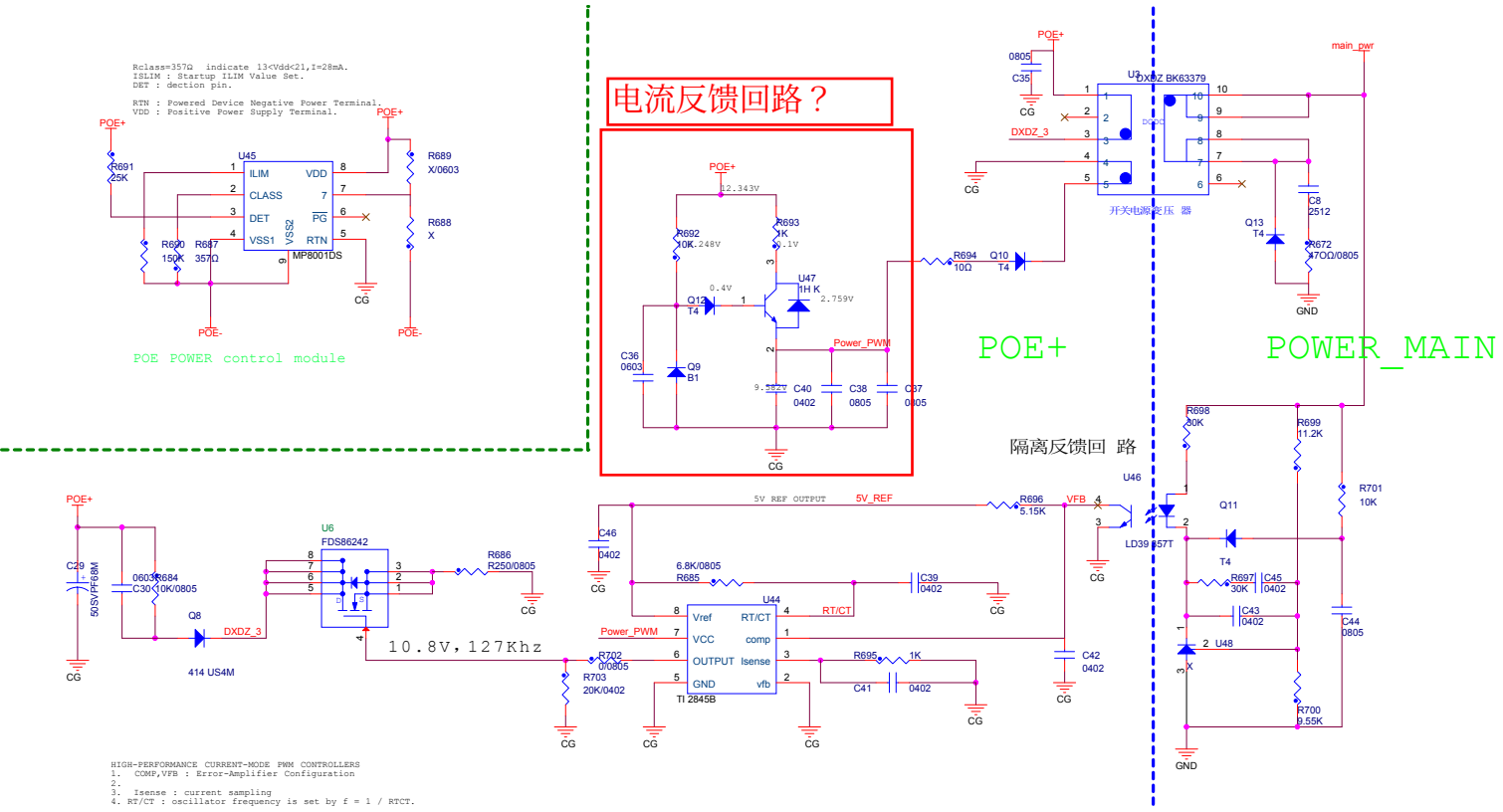
Rclass=357Ω indicate 13<Vdd<21,I=28mA.
ISLIM : Startup ILIM Value Set.
DET : dection pin.
RTN : Powered Device Negative Power Terminal.
VDD : Positive Power Supply Terminal.
POE+
R691 25K
U45
ILIM
CLASS
DET
VSS1
VDD
PG
RTN
VSS2
MP8001DS
R690 150K
R687 357Ω
R689 X/0603
R688 X
CG
POE-
POE POWER control module
电流反馈回路？
R692 10K
R693 1K
12.343V
0.248V
0.1V
0.4V
2.759V
U47
Q12 T4
Q9 B1
C36 0603
Power_PWM
9.582V
C40 0402
C38 0805
C37 0805
R694 10Ω
Q10 T4
DXDZ BK63379
DXDZ_3
0805
C35
开关电源变压 器
Q13 T4
C8 2512
R672 470Ω/0805
GND
main_pwr
POE+
POE_MAIN
隔离反馈回 路
R698 30K
R699 11.2K
R701 10K
U46
Q11
LD39 657T
T4
R697 30K
C45 0402
C43 0402
U48
C44 0805
R700 9.55K
C29 50SVPF68M
C30 0603
R684 10K/0805
Q8
414 US4M
DXDZ_3
U6
FDS86242
R686 R250/0805
10.8V，127Khz
5V REF OUTPUT
5V_REF
R696 5.15K
VFB
C46 0402
6.8K/0805 R685
C39 0402
U44
Vref
VCC
OUTPUT
GND
RT/CT
comp
Isense
vfb
TI 2845B
Power_PWM
R702 0/0805
R703 20K/0402
R695 1K
C41 0402
C42 0402
HIGH-PERFORMANCE CURRENT-MODE PWM CONTROLLERS
1. COMP,VFB : Error-Amplifier Configuration
2.
3. Isense : current sampling
4. RT/CT : oscillator frequency is set by f = 1 / RTCT.