MARK	REV.	ECN No./CONTENTS MODIFIED	BY	STATE	DATE
	A0	First Release	ylh	OPEN	16.01.15

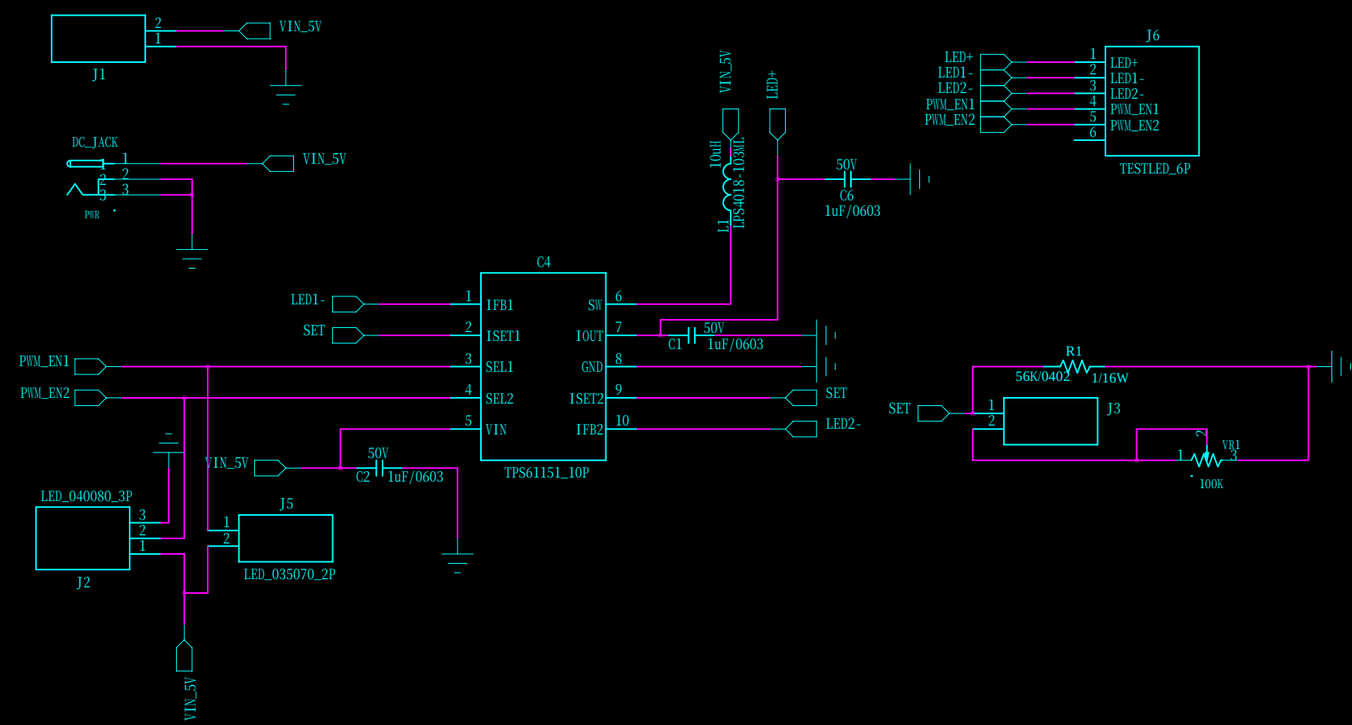

TCL 显示科技有限公司 TCL DISPLAY TECHNOLOGY CO., LTD.					
DESIGN	ÑîÀû°ê	CHECK	行亚鹏	APPROVE	吴石梁
DATA	16Äê1ÔÂ15ÈÕ	DATA	16.01.15	DATA	16.01.15

DRAWING No.: TPP-TPS61151-SCH

DRAWING TITLE: TST Ô-ÀíÍ¼

REV.: A0

SHEET SIZE: A3

PROJECTION:

UNIT:-----

SHEET: 1 / 1