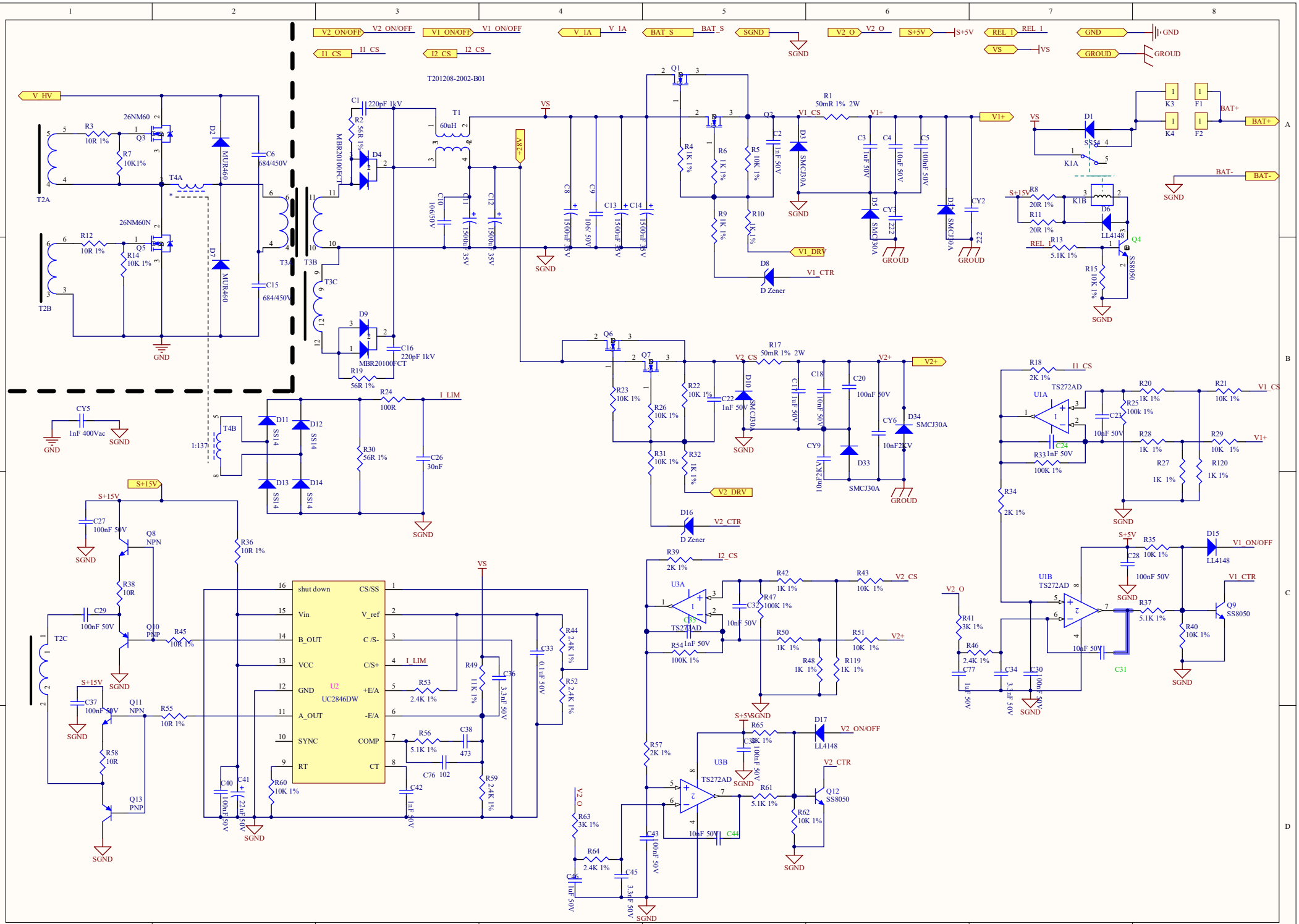
V2_ON/OFF
V1_ON/OFF
V_1A
BAT_S
SGND
V2_O
S+5V
REL_1
VS
GND
GROUD
I1_CS
I2_CS
T201208-2002-B01
V_HV
26NM60
26NM60N
MUR460
MBR20100FCT
T1
60uH
T2A
T2B
T3A
T3B
T3C
T4A
T4B
1:137
VS
+28V
V1_CS
V1+
V1_DRV
V1_CTR
D Zener
V2_CS
V2+
V2_DRV
V2_CTR
I_LIM
S+15V
U2
UC2846DW
shut down
Vin
B_OUT
VCC
GND
A_OUT
SYNC
RT
CS/SS
V_ref
C /S-
C/S+
+E/A
-E/A
COMP
CT
U1A
U1B
U3A
U3B
TS272AD
U1B
TS272AD
Q1
Q2
Q3
Q4
Q5
Q6
Q7
Q8
NPN
Q9
SS8050
Q10
PNP
Q11
NPN
Q12
SS8050
Q13
PNP
D1
SS54
D2
D3
SMCJ30A
D4
D5
D6
LL4148
D7
D8
D9
D10
D11
D12
D13
D14
SS14
D15
LL4148
D16
D17
LL4148
D33
D34
SMCJ30A
K1A
K1B
K3
K4
F1
F2
BAT+
BAT-
CY2
CY3
CY5
CY6
CY9
1nF 400Vac
R1
50mR 1% 2W
R17
50mR 1% 2W
R24
100R
R30
56R 1%
R36
10R 1%
R38
10R
R45
10R 1%
R55
10R 1%
R58
10R
R53
2.4K 1%
R56
5.1K 1%
R60
10K 1%
R59
2.4K 1%
R44
2.4K 1%
R52
2.4K 1%
R49
11K 1%
R61
5.1K 1%
R62
10K 1%
R63
3K 1%
R64
2.4K 1%
R41
3K 1%
R46
2.4K 1%
R37
5.1K 1%
R40
10K 1%
R35
10K 1%
R18
2K 1%
R34
2K 1%
R39
2K 1%
R57
2K 1%
R42
1K 1%
R43
10K 1%
R50
1K 1%
R51
10K 1%
R48
1K 1%
R119
1K 1%
R65
1K 1%
R20
1K 1%
R21
10K 1%
R25
100k 1%
R28
1K 1%
R29
10K 1%
R27
1K 1%
R120
1K 1%
R33
100K 1%
R54
100K 1%
R47
100K 1%
R8
20R 1%
R11
20R 1%
R13
5.1K 1%
R15
10K 1%
C1
220pF 1kV
C16
220pF 1kV
C10
100/50V
C11
1500uF 35V
C12
1500uF 35V
C8
1500uF 50V
C9
100/50V
C13
1500uF 50V
C14
1500uF 35V
C6
684/450V
C15
684/450V
C26
30nF
C27
100nF 50V
C29
100nF 50V
C37
100nF 50V
C40
100nF 50V
C41
22uF 50V
C42
1nF 50V
C36
3.3nF 50V
C33
0.1uF 50V
C38
473
C76
102
C32
10nF 50V
C44
10nF 50V
C43
100nF 50V
C45
3.3nF 50V
C46
1nF 50V
C34
3.3nF 50V
C30
100nF 50V
C31
C28
100nF 50V
C77
1nF 50V
C22
1nF 50V
C23
10nF 50V
C24
1nF 50V
C18
10nF 50V
C20
100nF 50V
C19
1uF 50V
C3
1uF 50V
C4
10nF 50V
C5
100nF 50V
C2
1nF 50V
C7
10nF 50V
C17
10nF 2KV
C21
10nF 2KV