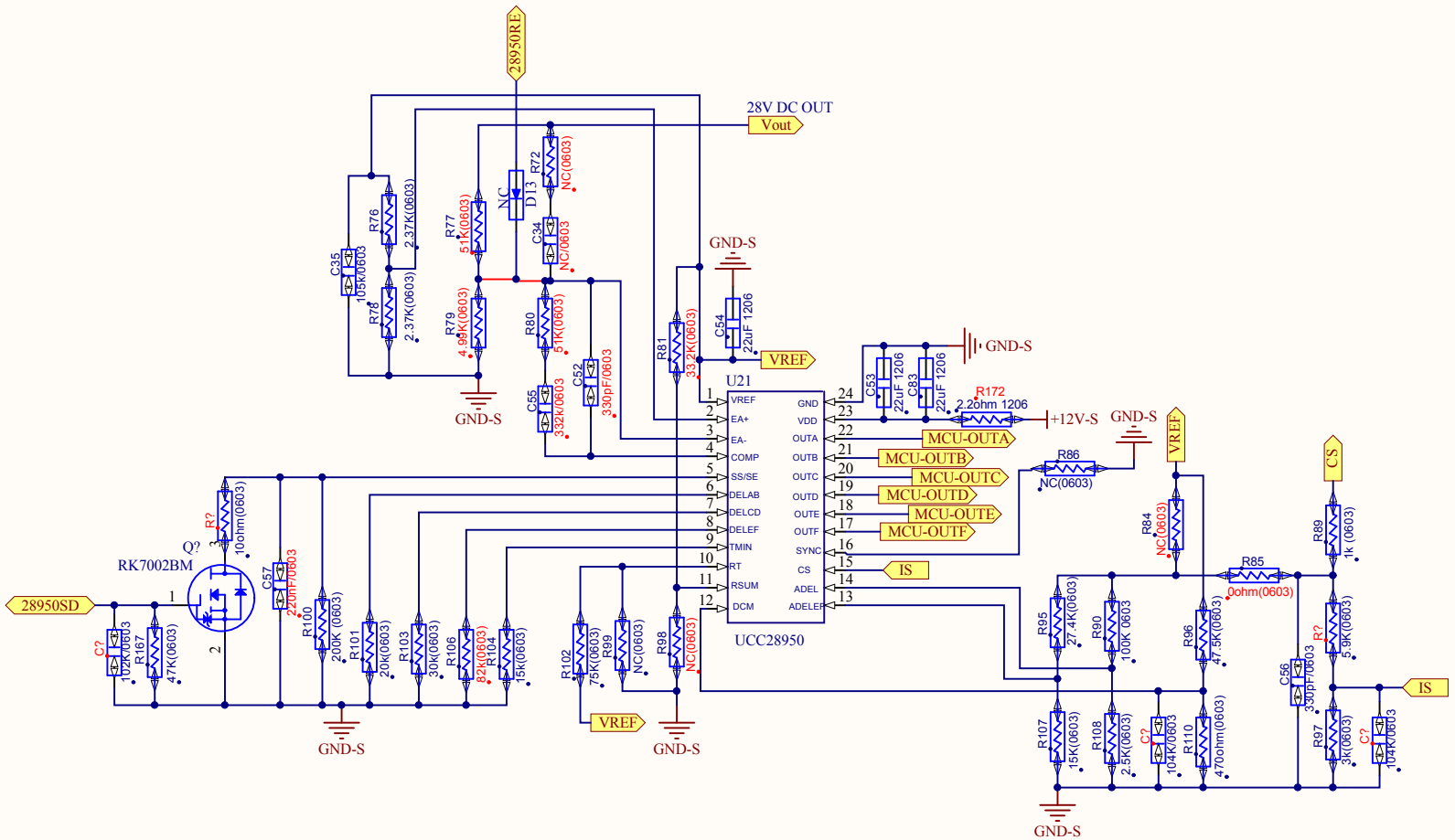

DC OUTPUT VOLTAGE&CURRENT OCP

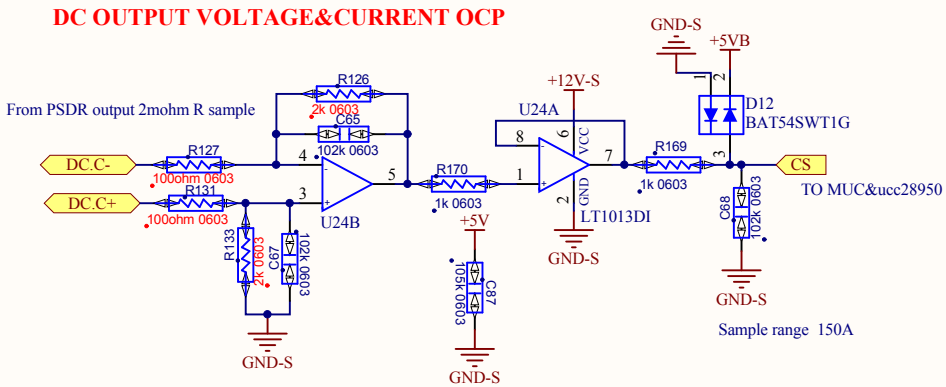

Title		
Size A4	Number	Revision
Date: 2016/8/6		Sheet of
File: E:\ \..\Sheet1.SchDoc		Drawn By: