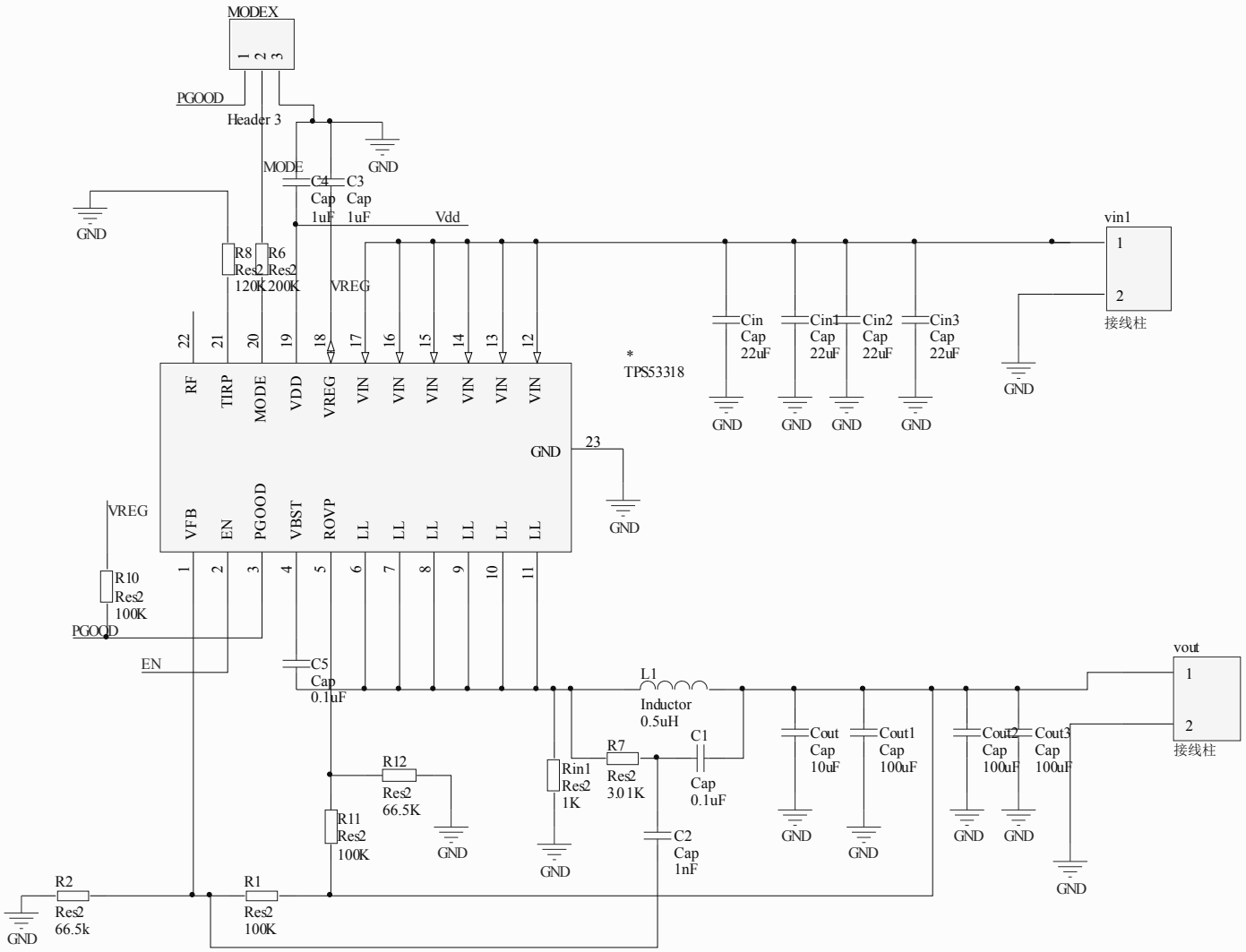


| Title | | |
|---|---|---|
| Size A4 | Number | Revision |
| Date: 2017/4/14 | | Sheet of |
| File: E:\微模组\pcb\Sheet1.SchDoc | | Drawn By: |