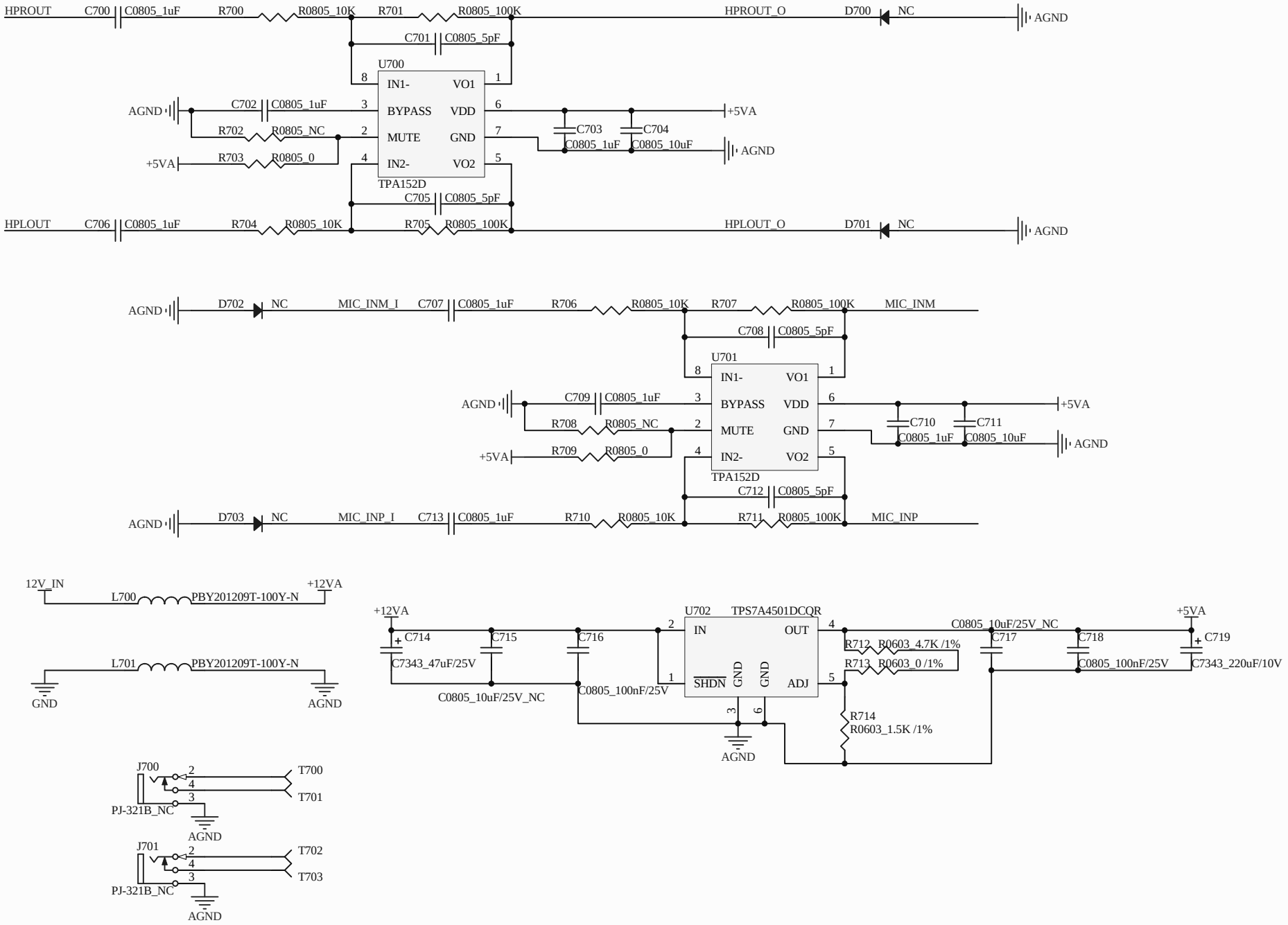
HPROUT
C700
C0805_1uF
R700
R0805_10K
R701
R0805_100K
HPROUT_O
D700
NC
AGND
C701
C0805_5pF
U700
IN1-
VO1
BYPASS
VDD
MUTE
GND
IN2-
VO2
TPA152D
C702
C0805_1uF
R702
R0805_NC
R703
R0805_0
+5VA
C703
C0805_1uF
C704
C0805_10uF
C705
C0805_5pF
HPLOUT
C706
R704
R705
HPLOUT_O
D701
D702
MIC_INM_I
C707
R706
R707
MIC_INM
C708
U701
C709
R708
R709
C710
C711
C712
D703
MIC_INP_I
C713
R710
R711
MIC_INP
12V_IN
L700
PBY201209T-100Y-N
+12VA
L701
GND
U702
TPS7A4501DCQR
IN
OUT
SHDN
GND
ADJ
C714
C7343_47uF/25V
C715
C716
C0805_10uF/25V_NC
C0805_100nF/25V
R712
R0603_4.7K /1%
R713
R0603_0 /1%
R714
R0603_1.5K /1%
C717
C718
C719
C7343_220uF/10V
J700
T700
T701
PJ-321B_NC
J701
T702
T703