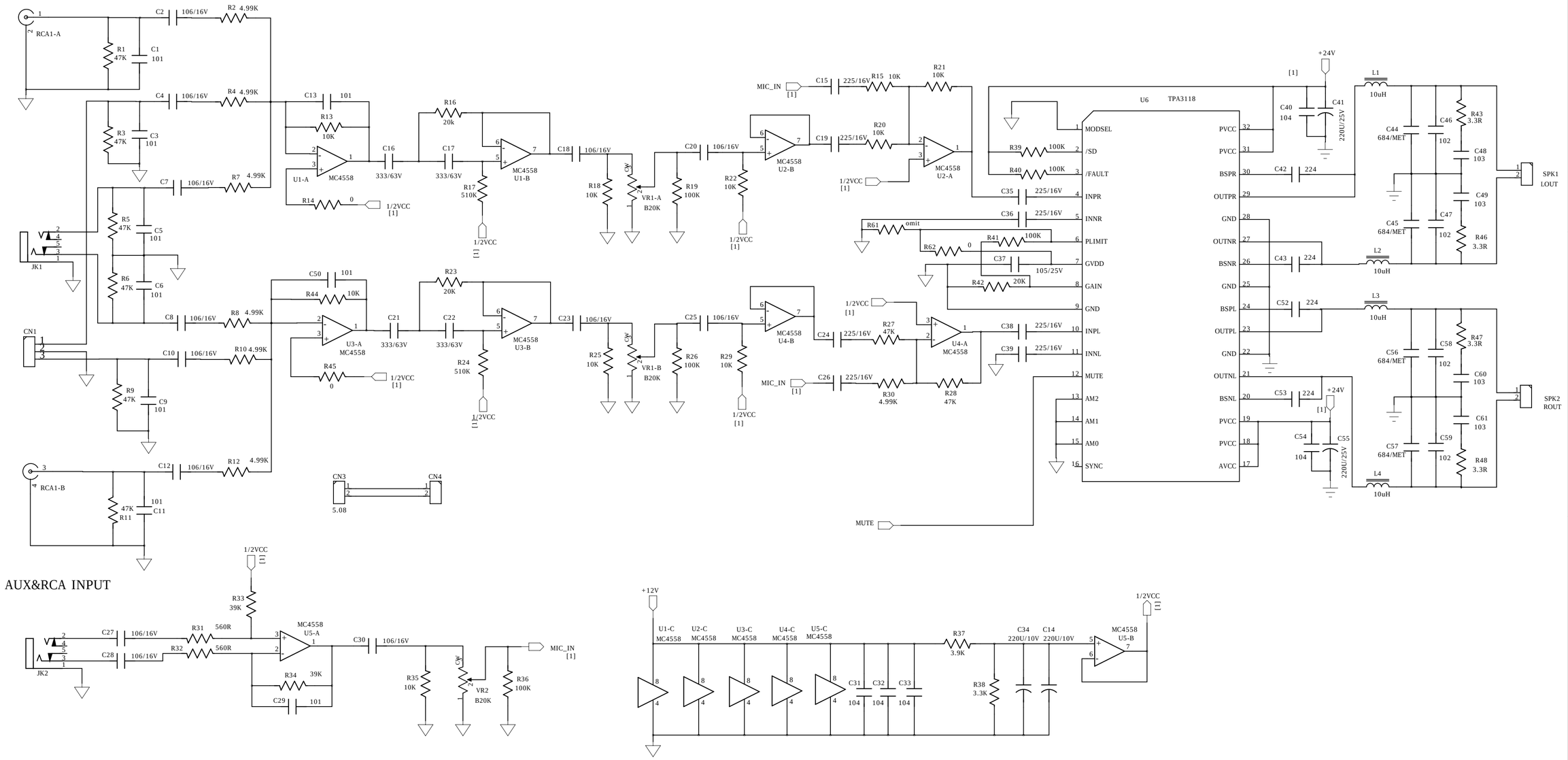

DWG NO:					
COMPANY:					
TITLE:					
DRAWN:	DATED:	CHECKED:	DATED:	APPROVED:	DATED:
SIZE:A2		REV:1.0		SHEET: 3 OF 3	