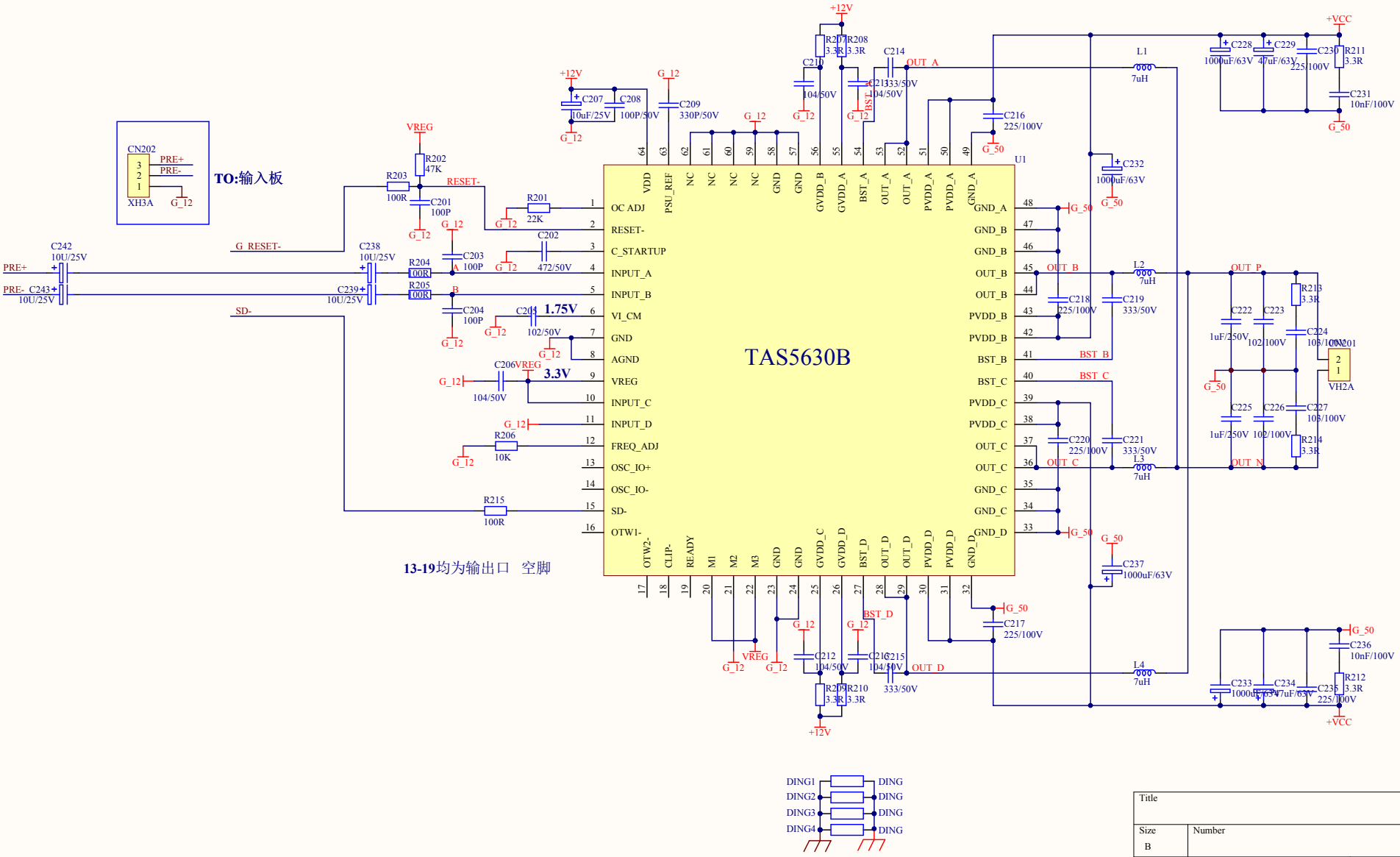

Title		
Size B	Number	Revision
Date: 2016/12/13	Sheet of	
File: C:\Users\..\Sheet1.Sch	Drawn By:	