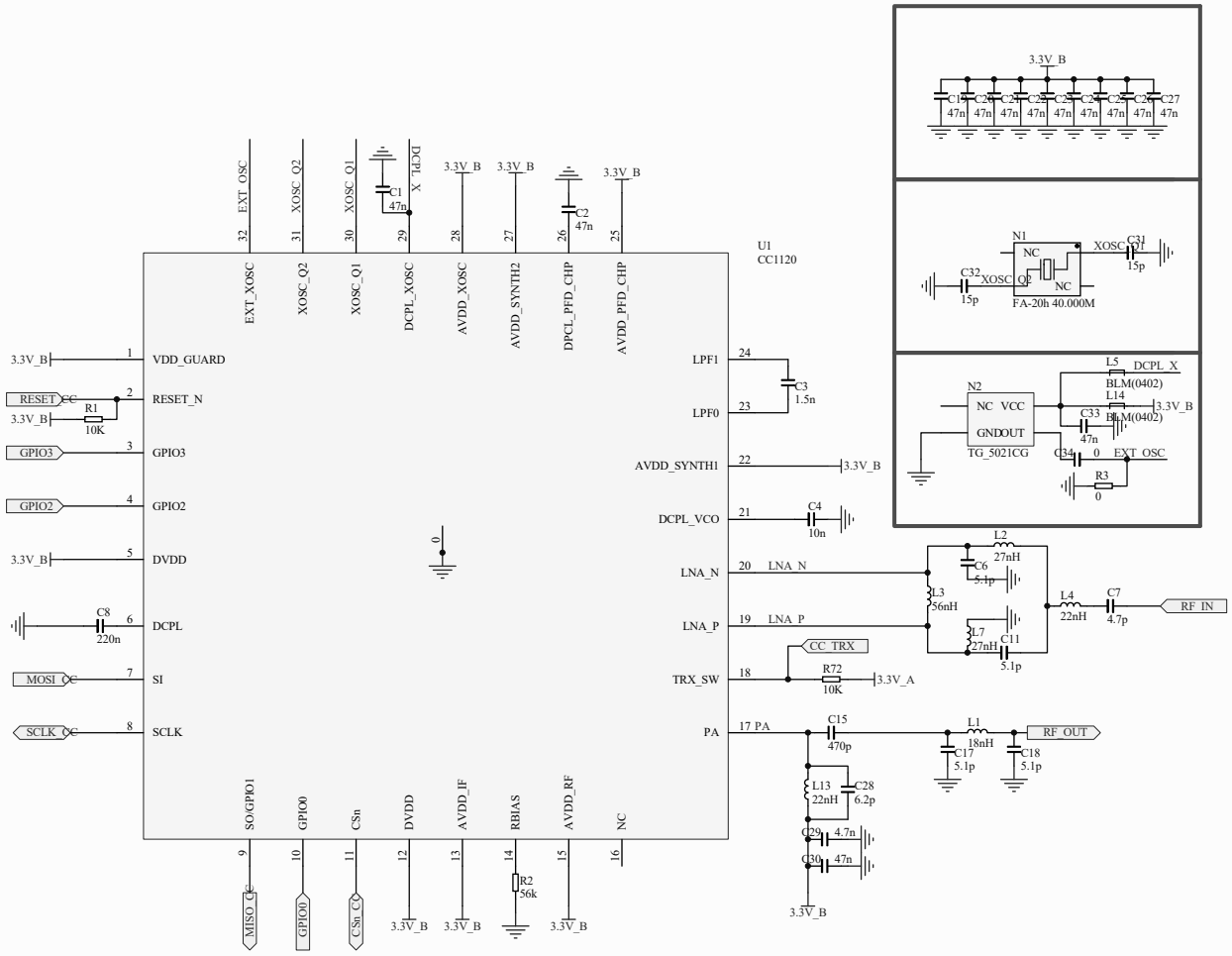

Title		
Size A3	Number	Revision
Date: 2/13/2017		Sheet of
File: E:\QT\CCCCP\SCH\CC1120.SchDoc		Drawn By: