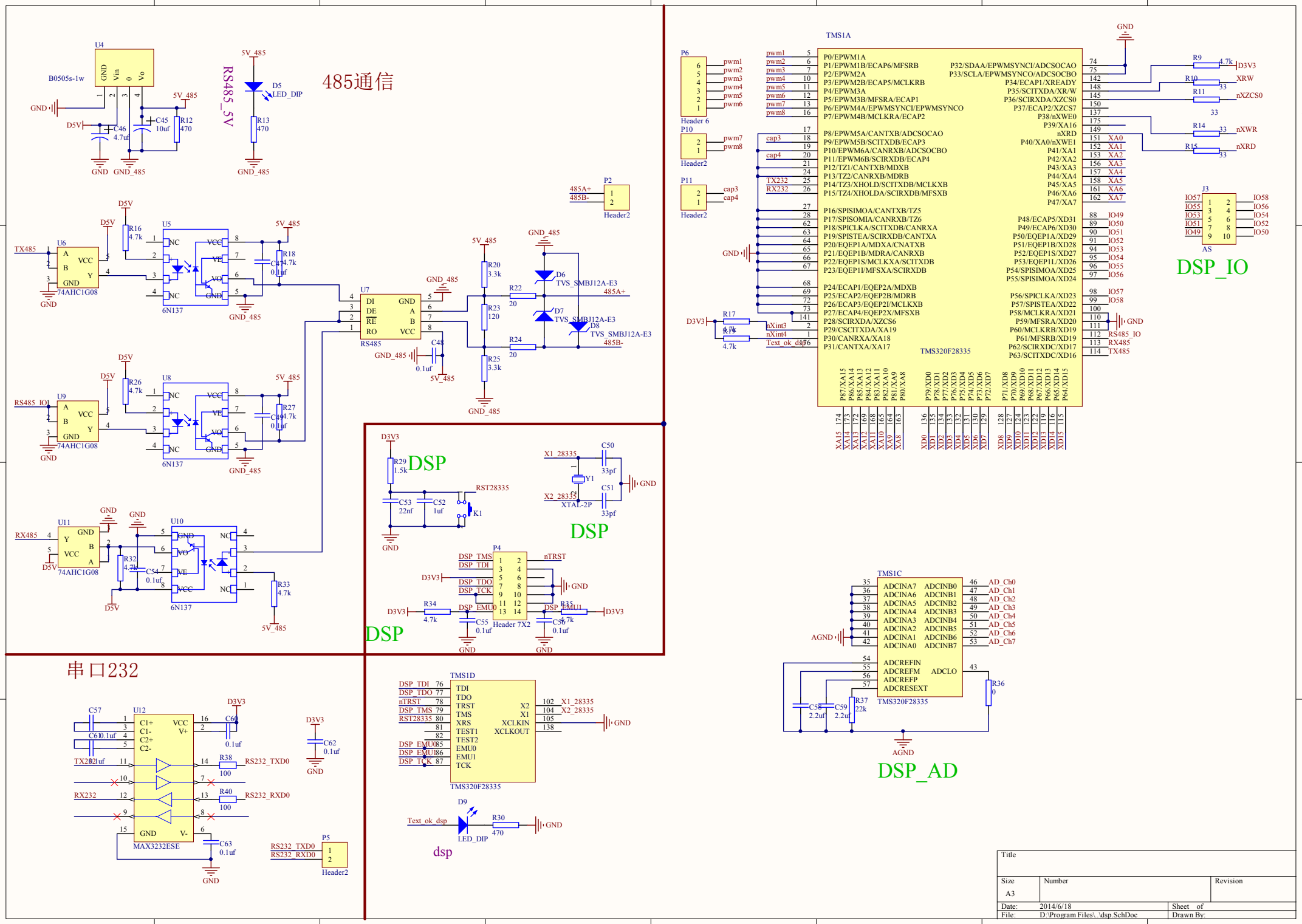
485通信
RS485_5V
B0505s-1w
U4
GND
Vin
0
Vo
5V_485
D5V
C46
4.7uf
C45
10uf
R12
470
D5
LED_DIP
R13
470
GND_485
U5
U6
U7
U8
U9
U10
U11
6N137
74AHC1G08
RS485
TX485
RS485_IO
RX485
R16
4.7k
R18
4.7k
R26
4.7k
R27
4.7k
R32
4.7k
R33
4.7k
C47
0.1uf
C48
0.1uf
C54
0.1uf
R20
3.3k
R23
120
R25
3.3k
R22
20
R24
20
D6
TVS_SMBJ12A-E3
D7
TVS_SMBJ12A-E3
D8
TVS_SMBJ12A-E3
485A+
485B-
P2
Header2
DSP
R29
1.5k
C53
22nf
C52
1uf
RST28335
K1
X1_28335
X2_28335
C50
33pf
C51
33pf
Y1
XTAL-2P
P4
Header 7X2
DSP_TMS
DSP_TDI
DSP_TDO
DSP_TCK
DSP_EMU0
DSP_EMU1
nTRST
R34
4.7k
R35
4.7k
C55
0.1uf
C56
0.1uf
串口232
U12
MAX3232ESE
C57
0.1uf
C60
0.1uf
C61
0.1uf
C62
0.1uf
C63
0.1uf
TX232
RX232
R38
100
R40
100
RS232_TXD0
RS232_RXD0
P5
Header2
TMS1D
TMS320F28335
TDI
TDO
TRST
TMS
XRS
TEST1
TEST2
EMU0
EMU1
TCK
XCLKIN
XCLKOUT
X2
X1
Text_ok_dsp
D9
LED_DIP
R30
470
dsp
TMS1A
TMS320F28335
P6
Header 6
P10
Header2
P11
Header2
pwm1
pwm2
pwm3
pwm4
pwm5
pwm6
pwm7
pwm8
cap3
cap4
TX232
RX232
nXint3
nXint4
Text_ok_dsp
R17
4.7k
R18
4.7k
D3V3
P0/EPWM1A
P1/EPWM1B/ECAP6/MFSRB
P2/EPWM2A
P3/EPWM2B/ECAP5/MCLKRB
P4/EPWM3A
P5/EPWM3B/MFSRA/ECAP1
P6/EPWM4A/EPWMSYNCI/EPWMSYNCO
P7/EPWM4B/MCLKRA/ECAP2
P8/EPWM5A/CANTXB/ADCSOCAO
P9/EPWM5B/SCITXDB/ECAP3
P10/EPWM6A/CANRXB/ADCSOCBO
P11/EPWM6B/SCIRXDB/ECAP4
P12/TZ1/CANTXB/MDXB
P13/TZ2/CANRXB/MDRB
P14/TZ3/XHOLD/SCITXDB/MCLKXB
P15/TZ4/XHOLDA/SCIRXDB/MFSXB
P16/SPISIMOA/CANTXB/TZ5
P17/SPISOMIA/CANRXB/TZ6
P18/SPICLKA/SCITXDB/CANRXA
P19/SPISTEA/SCIRXDB/CANTXA
P20/EQEP1A/MDXA/CNATXB
P21/EQEP1B/MDRA/CANRXB
P22/EQEP1S/MCLKXA/SCITXDB
P23/EQEP1I/MFSXA/SCIRXDB
P24/ECAP1/EQEP2A/MDXB
P25/ECAP2/EQEP2B/MDRB
P26/ECAP3/EQEP2I/MCLKXB
P27/ECAP4/EQEP2X/MFSXB
P28/SCIRXDA/XZCS6
P29/CSCITXDA/XA19
P30/CANRXA/XA18
P31/CANTXA/XA17
P32/SDAA/EPWMSYNCI/ADCSOCAO
P33/SCLA/EPWMSYNCO/ADCSOCBO
P34/ECAP1/XREADY
P35/SCITXDA/XR/W
P36/SCIRXDA/XZCS0
P37/ECAP2/XZCS7
P38/nXWE0
P39/XA16
nXRD
P40/XA0/nXWE1
P41/XA1
P42/XA2
P43/XA3
P44/XA4
P45/XA5
P46/XA6
P47/XA7
P48/ECAP5/XD31
P49/ECAP6/XD30
P50/EQEP1A/XD29
P51/EQEP1B/XD28
P52/EQEP1S/XD27
P53/EQEP1L/XD26
P54/SPISIMOA/XD25
P55/SPISIMOA/XD24
P56/SPICLKA/XD23
P57/SPISTEA/XD22
P58/MCLKRA/XD21
P59/MFSRA/XD20
P60/MCLKRB/XD19
P61/MFSRB/XD19
P62/SCIRXDC/XD17
P63/SCITXDC/XD16
XA0
XA1
XA2
XA3
XA4
XA5
XA6
XA7
IO49
IO50
IO51
IO52
IO53
IO54
IO55
IO56
IO57
IO58
RS485_IO
RX485
TX485
R9
4.7k
R10
33
R11
33
R14
33
R15
33
XRW
nXZCS0
nXWR
nXRD
J3
AS
DSP_IO
TMS1C
TMS320F28335
ADCINA7
ADCINA6
ADCINA5
ADCINA4
ADCINA3
ADCINA2
ADCINA1
ADCINA0
ADCINB0
ADCINB1
ADCINB2
ADCINB3
ADCINB4
ADCINB5
ADCINB6
ADCINB7
ADCREFIN
ADCREFM
ADCREFP
ADCRESEXT
ADCLO
AD_Ch0
AD_Ch1
AD_Ch2
AD_Ch3
AD_Ch4
AD_Ch5
AD_Ch6
AD_Ch7
AGND
C58
2.2uf
C59
2.2uf
R37
22k
R36
0
DSP_AD
Title
Size
A3
Number
Revision
Date:
2014/6/18
Sheet of
File:
D:\Program Files\..\dsp.SchDoc
Drawn By: