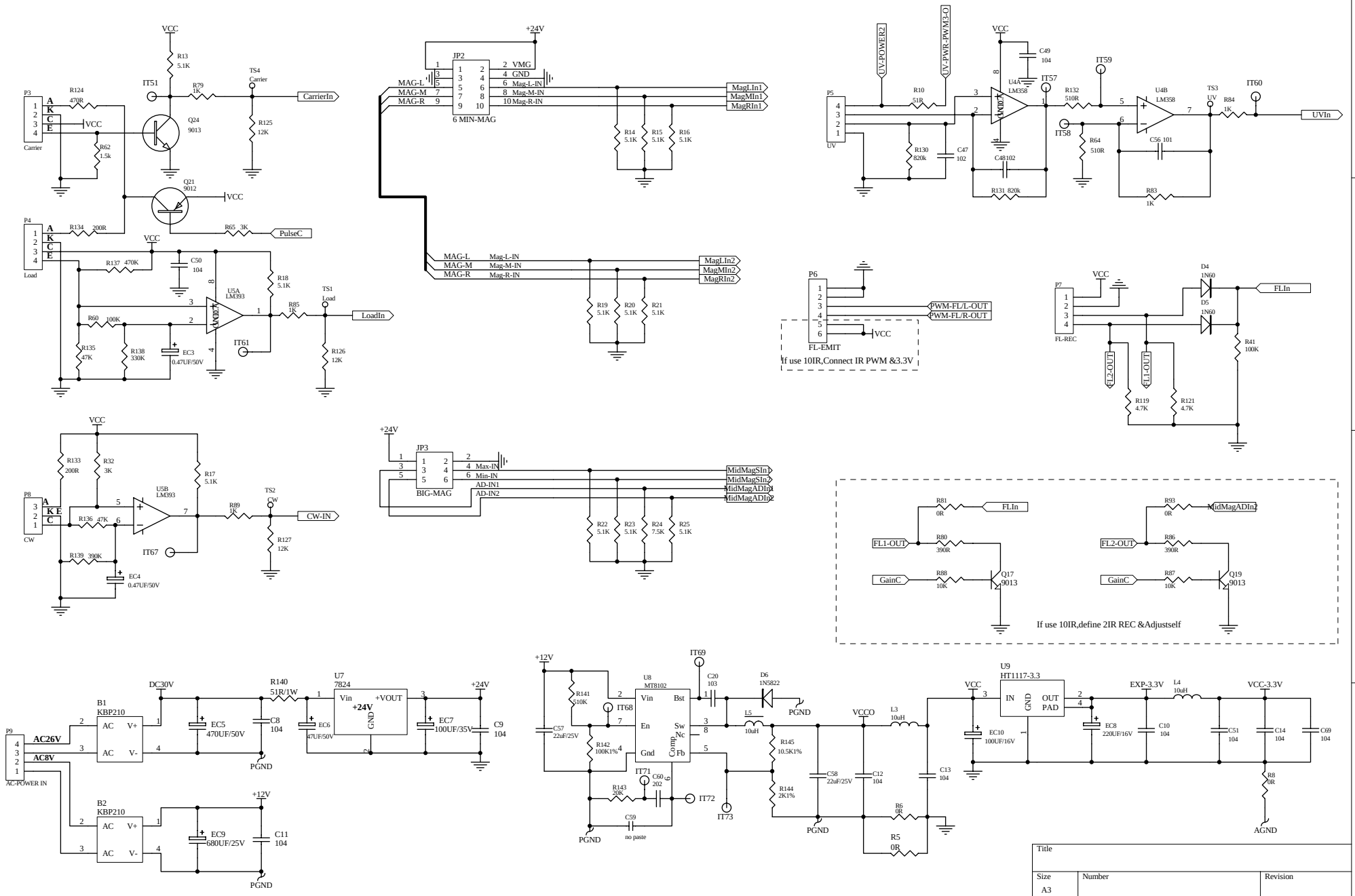
P3
Carrier
R124 470R
VCC
R62 1.5k
IT51
R13 5.1K
R79 1K
Q24 9013
TS4 Carrier
R125 12K
CarrierIn
Q21 9012
R65 3K
PulseC
P4
Load
R134 200R
R137 470K
C50 104
U5A LM393
R18 5.1K
TS1 Load
R85 1K
LoadIn
R60 100K
R135 47K
R138 330K
EC3 0.47UF/50V
IT61
R126 12K
JP2
6 MIN-MAG
+24V
VMG
GND
Mag-L-IN
Mag-M-IN
Mag-R-IN
MAG-L
MAG-M
MAG-R
MagLIn1
MagMIn1
MagRIn1
R14 5.1K
R15 5.1K
R16 5.1K
MagLIn2
MagMIn2
MagRIn2
R19 5.1K
R20 5.1K
R21 5.1K
P5
UV
UV-POWER2
UV-PWR-PWM3-O
R10 51R
R130 820k
C47 102
U4A LM358
C49 104
IT57
IT59
R132 510R
IT58
R64 510R
U4B LM358
C56 101
C48 102
R131 820k
TS3 UV
R84 1K
R83 1K
IT60
UVIn
P6
FL-EMIT
PWM-FL/L-OUT
PWM-FL/R-OUT
If use 10IR,Connect IR PWM &3.3V
P7
FL-REC
D4 1N60
D5 1N60
FLIn
R41 100K
FL2-OUT
FL1-OUT
R119 4.7K
R121 4.7K
P8
CW
R133 200R
R32 3K
U5B LM393
R17 5.1K
R136 47K
R89 1K
TS2 CW
CW-IN
R127 12K
R139 390K
EC4 0.47UF/50V
IT67
JP3
BIG-MAG
Max-IN
Min-IN
AD-IN1
AD-IN2
MidMagSIn1
MidMagSIn2
MidMagADIn1
MidMagADIn2
R22 5.1K
R23 5.1K
R24 7.5K
R25 5.1K
R81 0R
R80 390R
R88 10K
Q17 9013
R93 0R
R86 390R
R87 10K
Q19 9013
If use 10IR,define 2IR REC &Adjustself
P9
AC-POWER IN
AC26V
AC8V
B1 KBP210
B2 KBP210
DC30V
EC5 470UF/50V
C8 104
PGND
R140 51R/1W
EC6 47UF/50V
U7 7824
Vin
+VOUT
GND
EC7 100UF/35V
C9 104
+12V
EC9 680UF/25V
C11 104
U8 MT8102
Vin
Bst
En
Sw
Nc
Gnd
Comp
Fb
IT68
IT69
IT71
IT72
IT73
R141 510K
C57 22uF/25V
R142 100K1%
R143 20K
C60 202
C59 no paste
C20 103
D6 1N5822
L5 10uH
R145 10.5K1%
R144 2K1%
C58 22uF/25V
VCCO
L3 10uH
C12 104
C13 104
R6 0R
R5 0R
U9 HT1117-3.3
IN
GND
OUT
PAD
EC10 100UF/16V
EC8 220UF/16V
EXP-3.3V
L4 10uH
VCC-3.3V
C10 104
C51 104
C14 104
C69 104
R8 0R
AGND
Title
Size A3
Number
Revision
Date: 21-Sep-2012
Sheet of
File: C:\Documents and Settings\daiwz\桌面\DF-5000B MAIN BOARD ver0.2-2012.7.30.Ddb
Drawn by