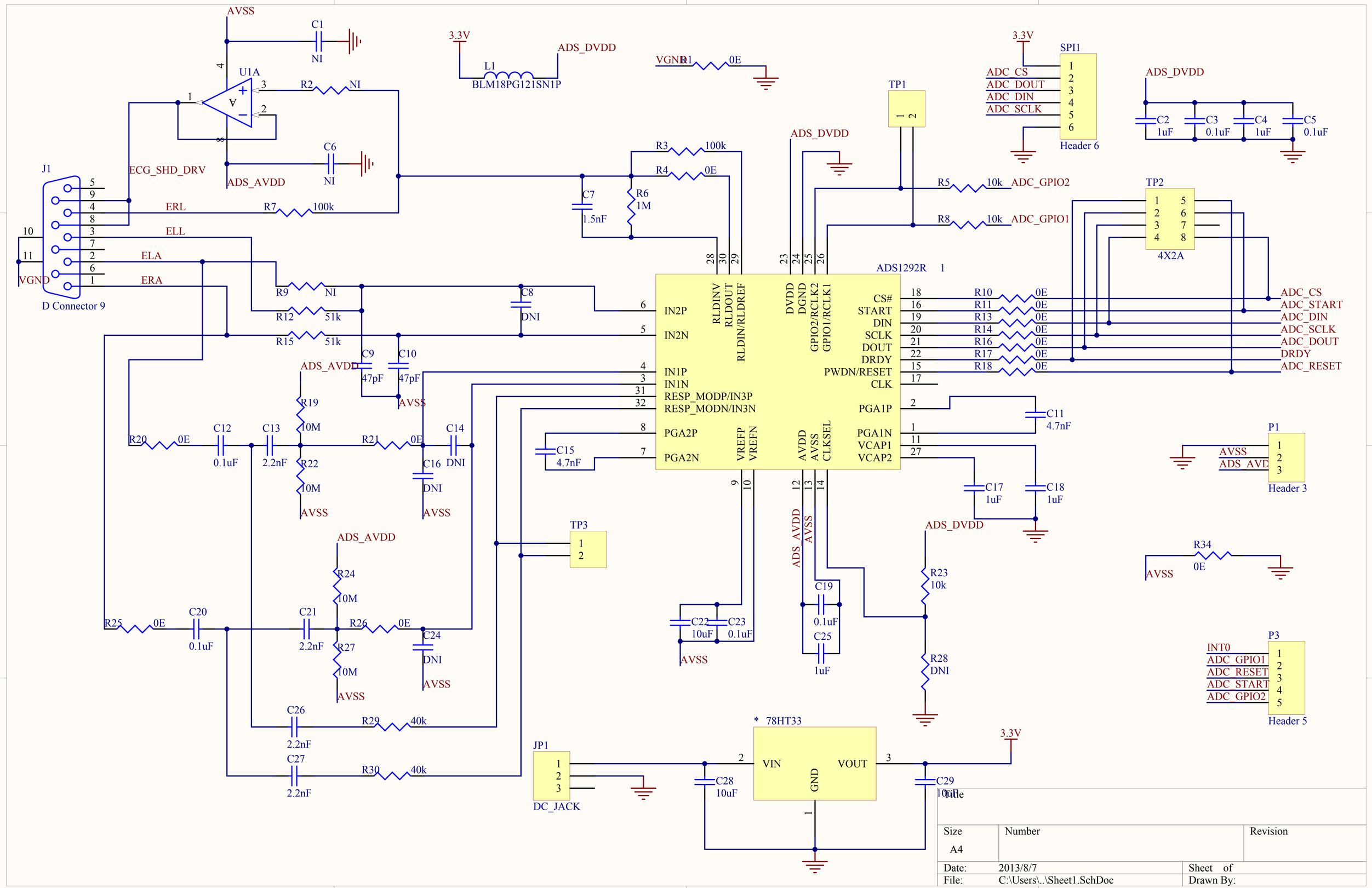
AVSS
C1
NI
U1A
R2
NI
C6
NI
ADS_AVDD
ECG_SHD_DRV
J1
D Connector 9
ERL
ELL
ELA
ERA
VGND
R7
100k
3.3V
L1
BLM18PG121SN1P
ADS_DVDD
VGND
R1
0E
R3
100k
R4
0E
C7
1.5nF
R6
1M
TP1
ADS_DVDD
R5
10k
ADC_GPIO2
R8
10k
ADC_GPIO1
3.3V
SPI1
ADC_CS
ADC_DOUT
ADC_DIN
ADC_SCLK
Header 6
ADS_DVDD
C2
1uF
C3
0.1uF
C4
1uF
C5
0.1uF
TP2
4X2A
ADS1292R 1
IN2P
IN2N
IN1P
IN1N
RESP_MODP/IN3P
RESP_MODN/IN3N
PGA2P
PGA2N
RLDINV
RLDOUT
RLDIN/RLDREF
VREFP
VREFN
DVDD
DGND
GPIO2/RCLK2
GPIO1/RCLK1
AVDD
AVSS
CLKSEL
CS#
START
DIN
SCLK
DOUT
DRDY
PWDN/RESET
CLK
PGA1P
PGA1N
VCAP1
VCAP2
R10
R11
R13
R14
R16
R17
R18
0E
ADC_CS
ADC_START
ADC_DIN
ADC_SCLK
ADC_DOUT
DRDY
ADC_RESET
R9
NI
R12
51k
R15
51k
C8
DNI
C9
47pF
C10
47pF
ADS_AVDD
AVSS
R19
10M
R22
10M
R20
0E
C12
0.1uF
C13
2.2nF
R21
0E
C14
DNI
C16
DNI
C15
4.7nF
C11
4.7nF
C17
1uF
C18
1uF
P1
AVSS
ADS_AVD
Header 3
TP3
ADS_AVDD
R24
10M
R27
10M
R25
0E
C20
0.1uF
C21
2.2nF
R26
0E
C24
DNI
C22
10uF
C23
0.1uF
C19
0.1uF
C25
1uF
ADS_AVDD
AVSS
ADS_DVDD
R23
10k
R28
DNI
R34
0E
AVSS
P3
INT0
ADC_GPIO1
ADC_RESET
ADC_START
ADC_GPIO2
Header 5
C26
2.2nF
R29
40k
C27
2.2nF
R30
40k
JP1
DC_JACK
* 78HT33
VIN
VOUT
GND
C28
10uF
C29
10uF
3.3V
Title
Size
A4
Number
Revision
Date:
2013/8/7
Sheet of
File:
C:\Users\..\Sheet1.SchDoc
Drawn By: