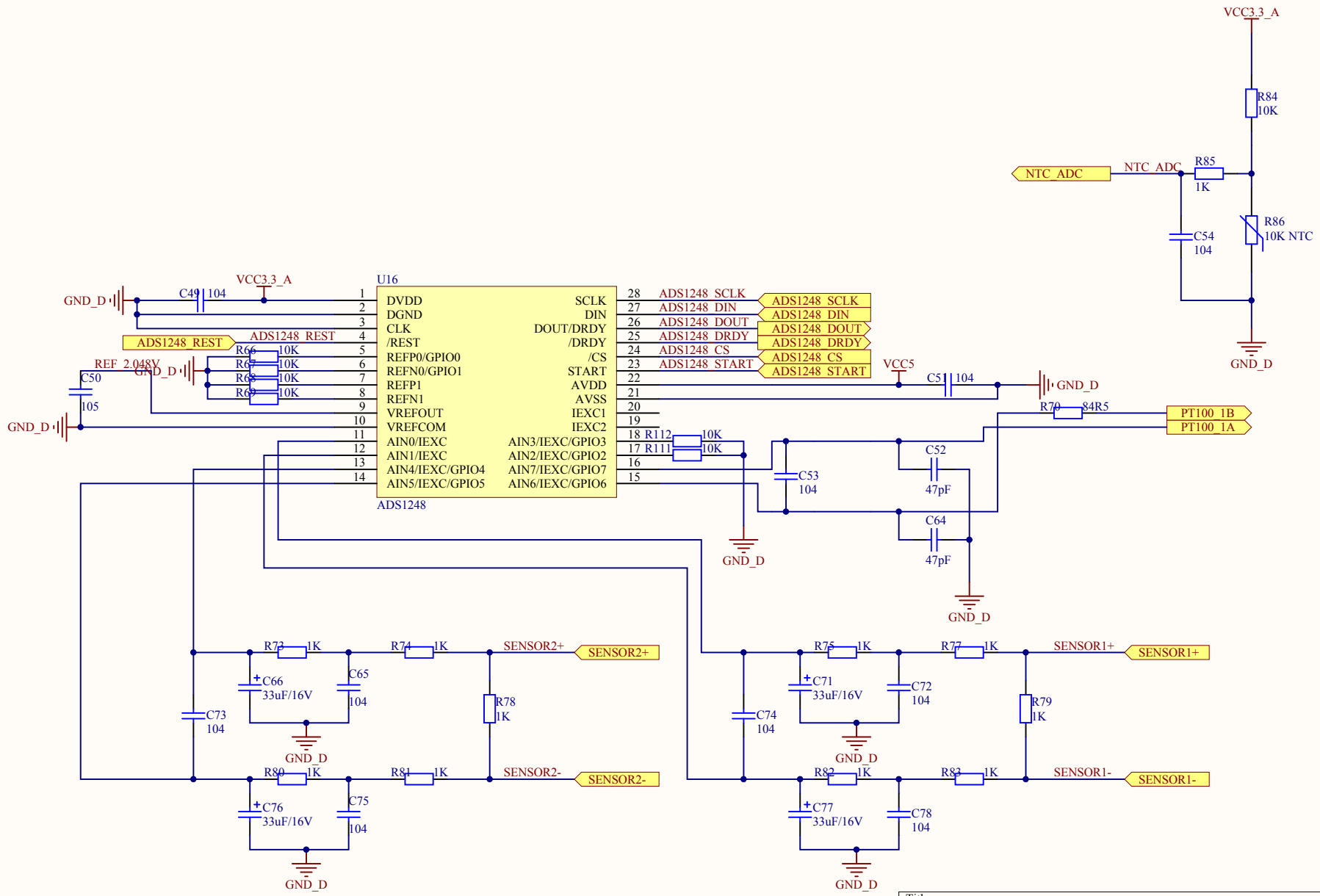

Title		
Size A4	Number	Revision
Date: 2012/7/29		Sheet of
File: E:\Project\..\ADS1248.SchDoc		Drawn By: