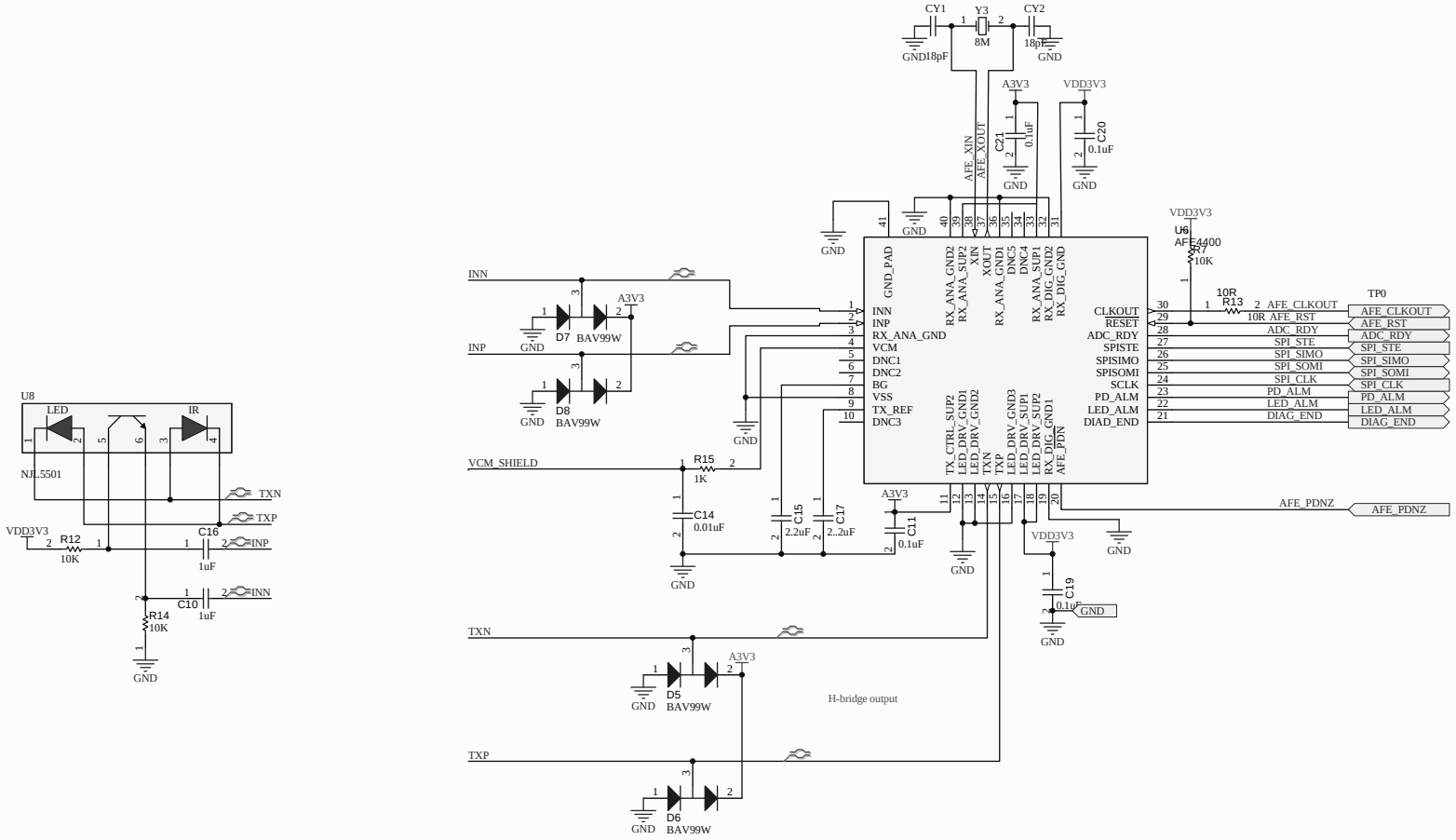


| Title | | |
|---|---|---|
| Size A3 | Number | Revision |
| Date: 2014-4-23 | | Sheet of |
| File: D:\PCB\..\AFE4400+NJL5501.SchDoc | | Drawn By: |