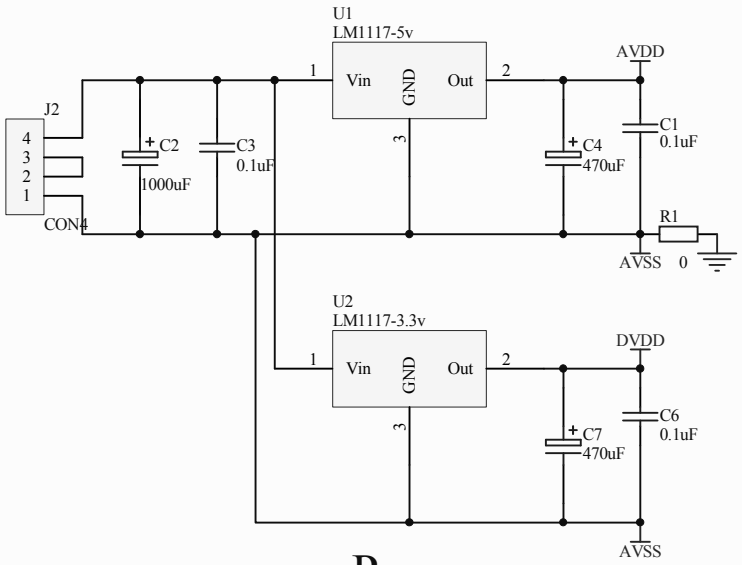
U1
LM1117-5v
Vin
GND
Out
AVDD
J2
CON4
C2
1000uF
C3
0.1uF
C4
470uF
C1
0.1uF
R1
0
AVSS
U2
LM1117-3.3v
DVDD
C7
470uF
C6
0.1uF
AVSS

Power

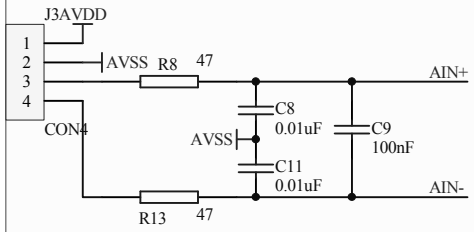
J3AVDD
AVSS
R8
47
AIN+
CON4
C8
0.01uF
C9
100nF
C11
0.01uF
AIN-
R13
47

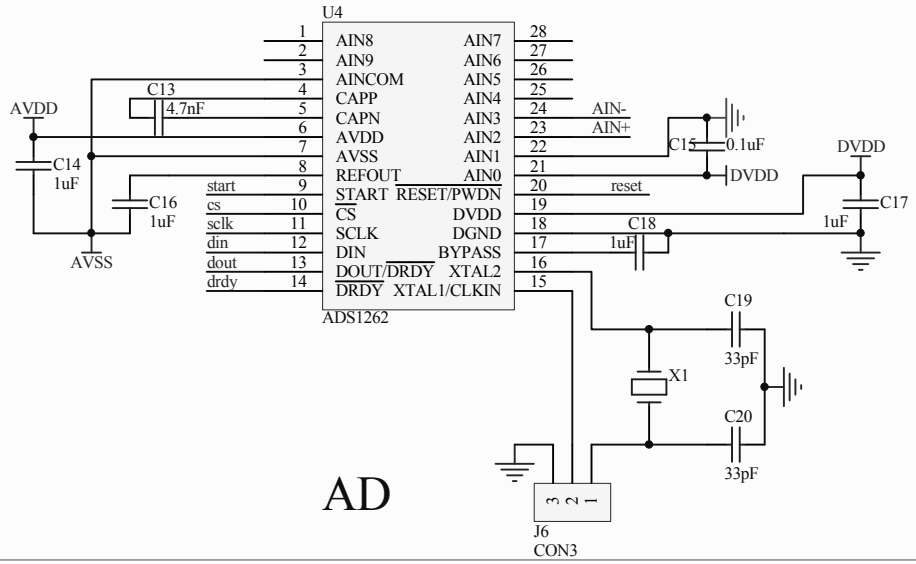
U4
AIN8
AIN9
AINCOM
CAPP
CAPN
AVDD
AVSS
REFOUT
START
CS
SCLK
DIN
DOUT/DRDY
DRDY
AIN7
AIN6
AIN5
AIN4
AIN3
AIN2
AIN1
AIN0
RESET/PWDN
DVDD
DGND
BYPASS
XTAL2
XTAL1/CLKIN
ADS1262
C13
4.7nF
C14
1uF
C16
1uF
start
cs
sclk
din
dout
drdy
AIN-
AIN+
C15
0.1uF
reset
C18
1uF
C17
1uF
C19
33pF
X1
C20
33pF
J6
CON3

AD

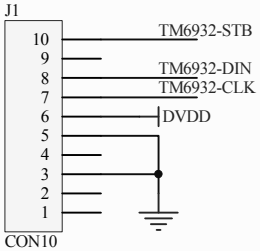
J1
TM6932-STB
TM6932-DIN
TM6932-CLK
DVDD
CON10

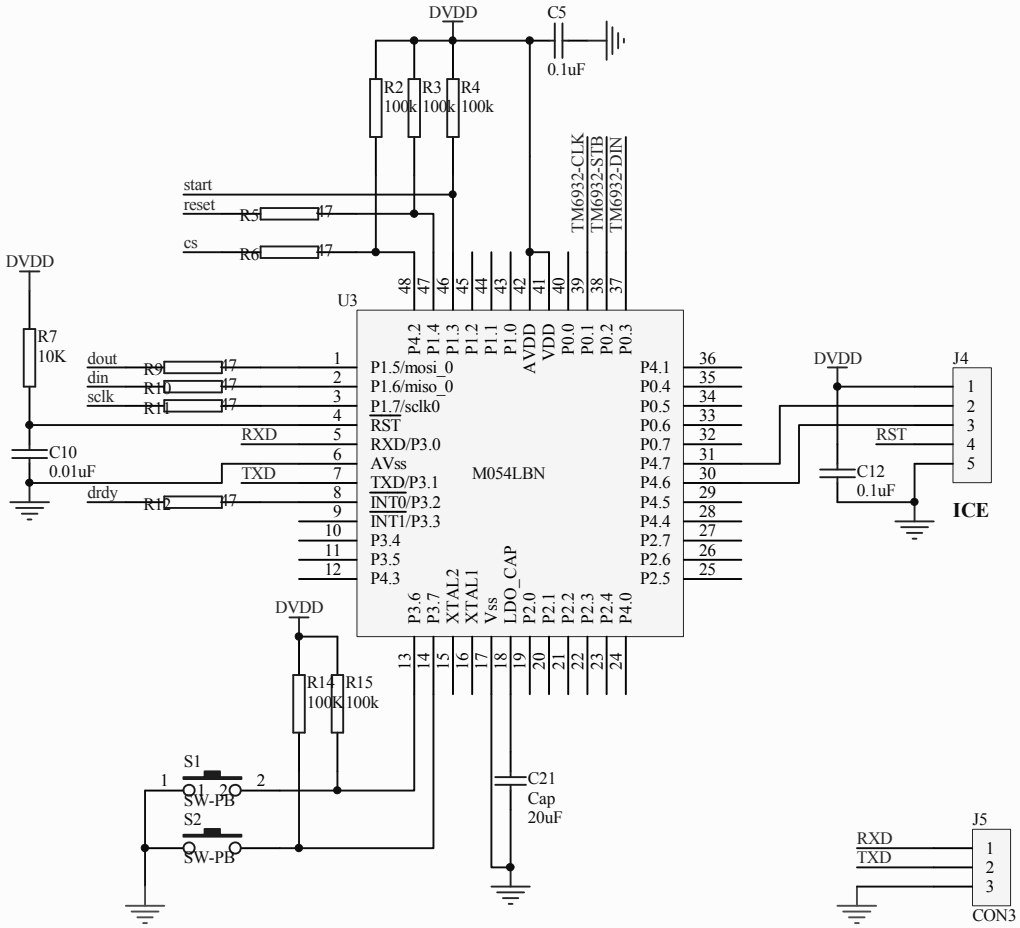
DVDD
C5
0.1uF
R2
100k
R3
100k
R4
100k
start
reset
R5
47
cs
R6
47
TM6932-CLK
TM6932-STB
TM6932-DIN
U3
R7
10K
dout
din
sclk
R9
47
R10
47
R11
47
RXD
TXD
drdy
R12
47
C10
0.01uF
P1.5/mosi_0
P1.6/miso_0
P1.7/sclk0
RST
RXD/P3.0
AVss
TXD/P3.1
INT0/P3.2
INT1/P3.3
P3.4
P3.5
P4.3
M054LBN
P4.1
P0.4
P0.5
P0.6
P0.7
P4.7
P4.6
P4.5
P4.4
P2.7
P2.6
P2.5
P4.2
P1.4
P1.3
P1.2
P1.1
P1.0
AVDD
VDD
P0.0
P0.1
P0.2
P0.3
P3.6
P3.7
XTAL2
XTAL1
Vss
LDO_CAP
P2.0
P2.1
P2.2
P2.3
P2.4
P4.0
J4
RST
C12
0.1uF
ICE
R14
100k
R15
100k
S1
SW-PB
S2
SW-PB
C21
Cap
20uF
J5
RXD
TXD
CON3

MCU