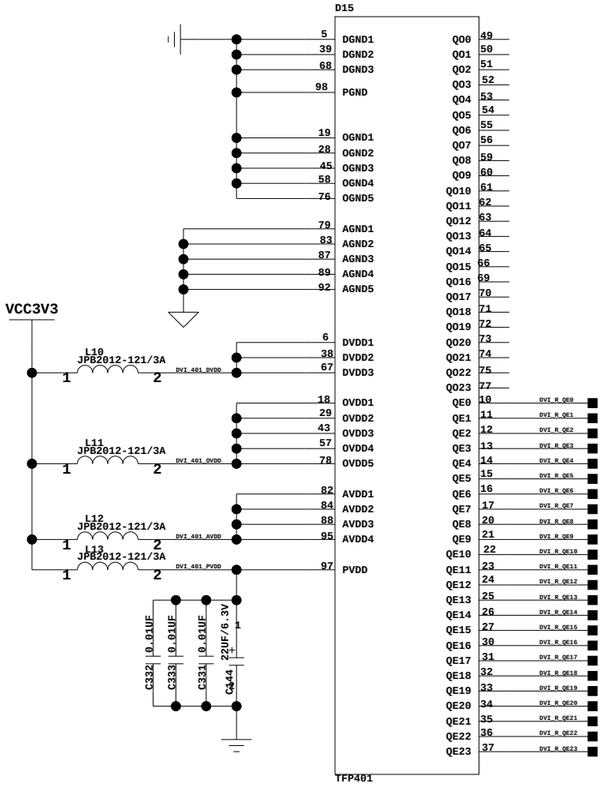

Place three 0.01uF capacitors in parallel as close as possible between PVDD and Ground

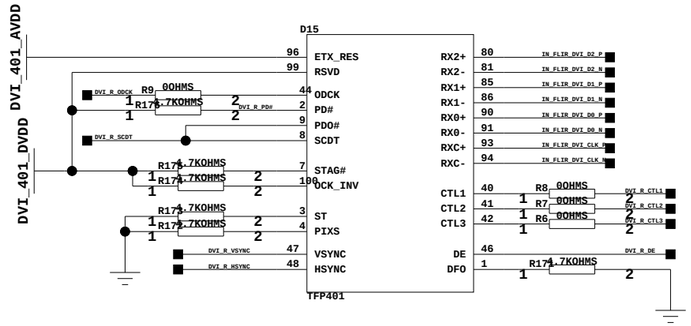

STAG:1 Normal simultaneous even/odd pixel output

OCK_INV:1 Latches output data on rising ODCK edge

PIXS:0 ONE pixel/clock, even and odd pixels are output sequentially, one at a time

Place one 0.1uF capacitor as close as possible between each VDD and Ground

A 22uF tantalum capacitor should be placed between the supply and 0.01uF capacitors

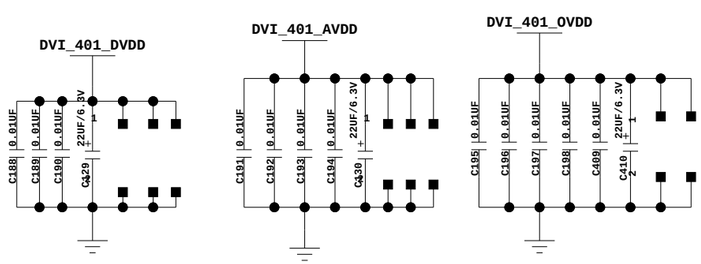

SIZE	TITLE	
B	GPU_SCHEMATIC	
DATE 6-13-2014_16:53	SHEET 14 OF 28	