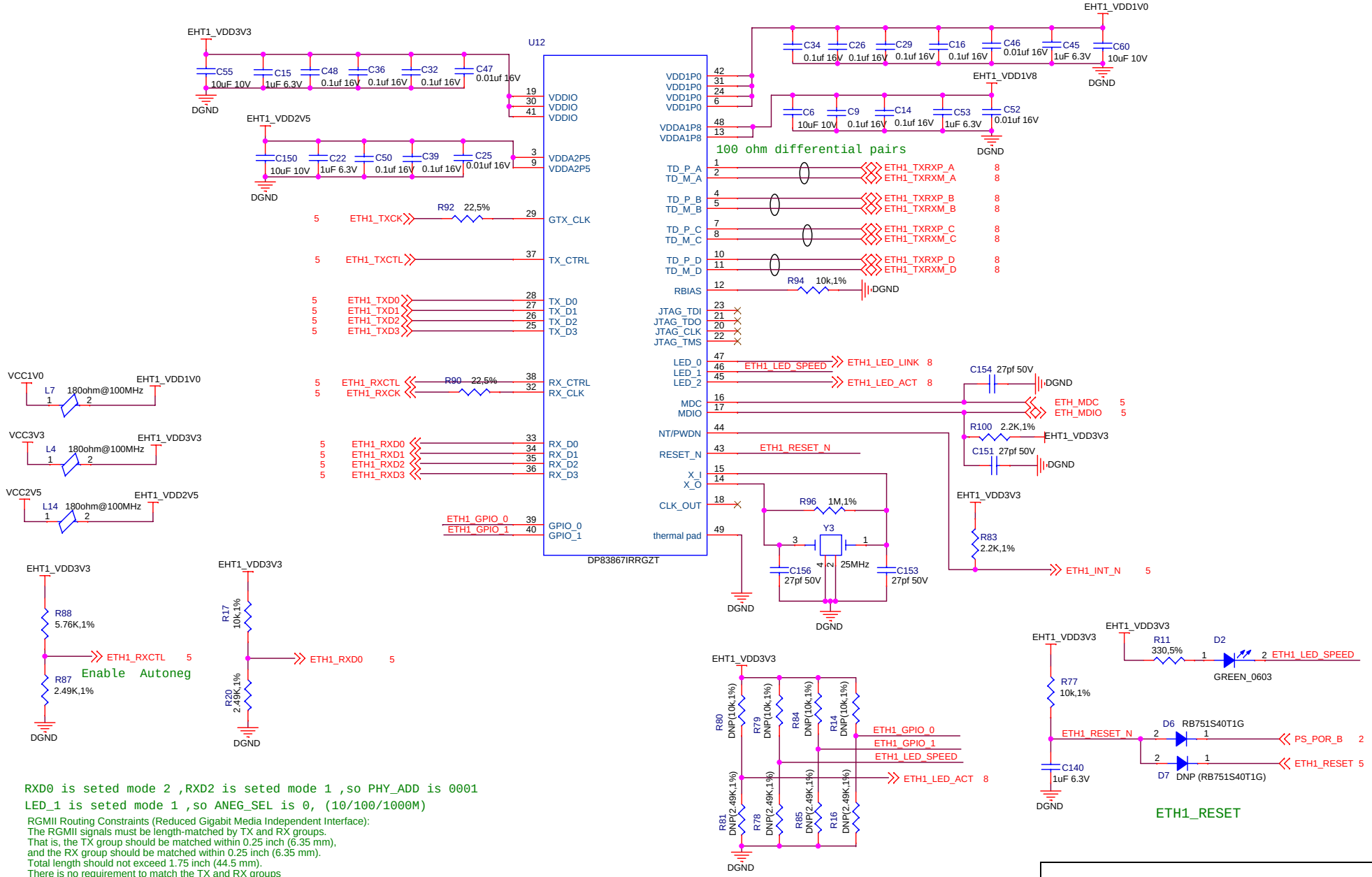

Title	<Title>	
Size B	Document Number <Doc>	Rev <RevCode>
Date: Tuesday, September 06, 2016	Sheet 9 of 11	