PDF-XChange Product
Click to buy NOW!
www.tracker-software.com

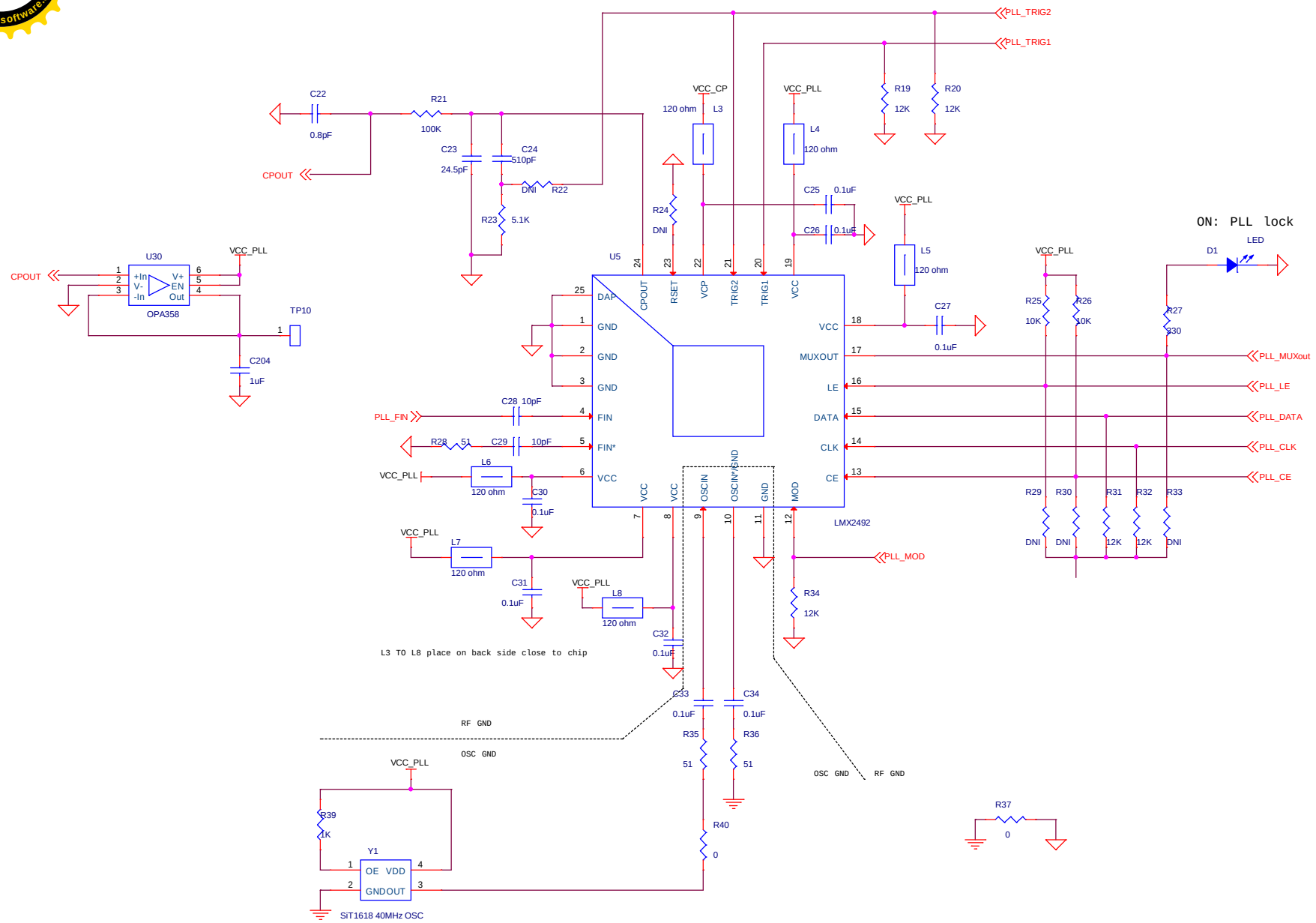

Title	Coelops		
Size A3	Document Number PLL -TI		Rev 1.0
Date: Thursday, May 04, 2017		Sheet 2 of 8	