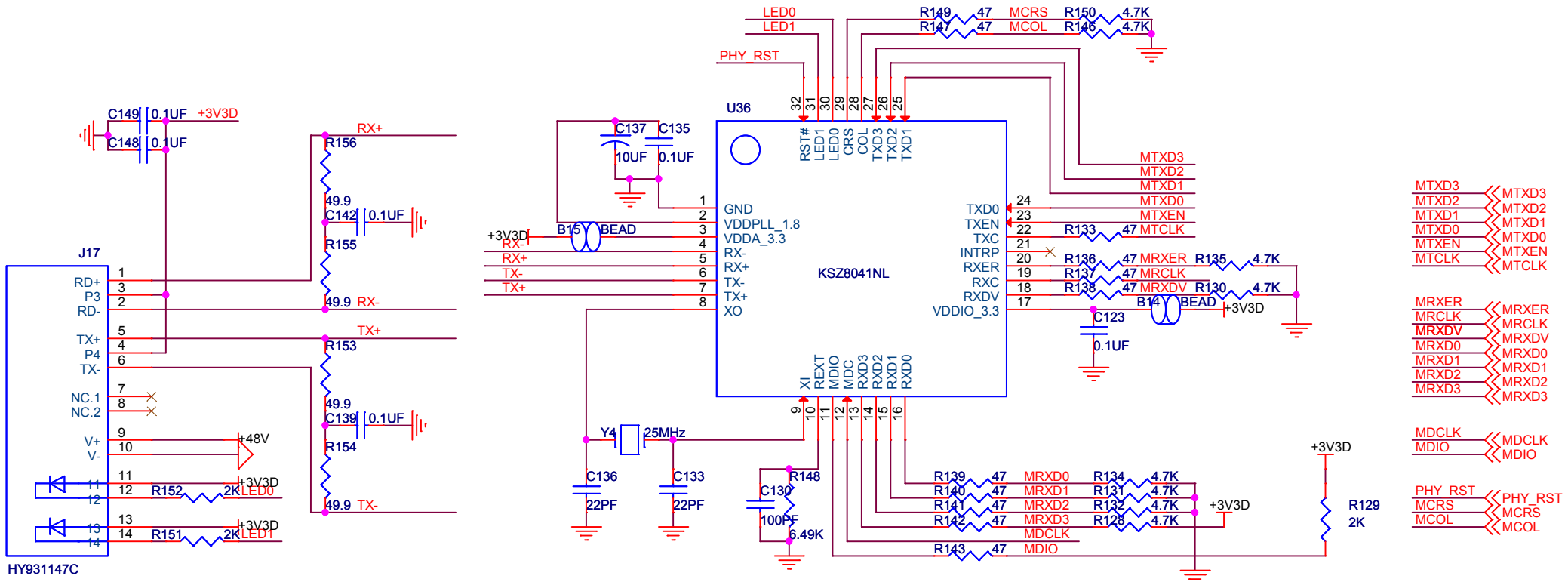

Title	<Title>	
Size A4	Document Number <Doc>	Rev <RevCo
Date: Friday, July 05, 2013	Sheet 3 of 8	