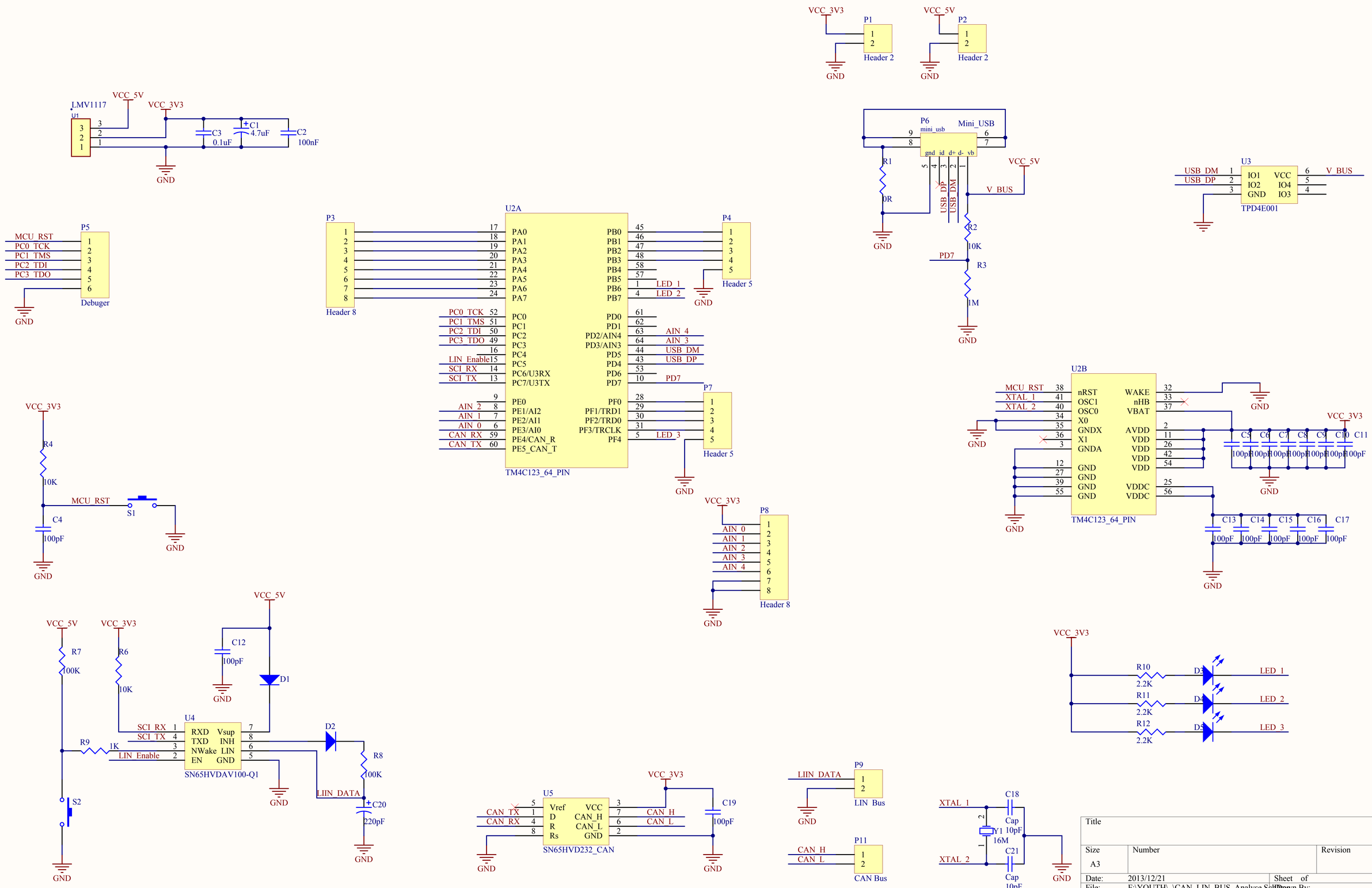

Title		
Size A3	Number	Revision
Date: 2013/12/21	Sheet of	
File: F:\YOUTH\..\CAN_LIN_BUS_Analyse.SchDoc	Drawn By:	